Bluetooth 6.0, 802.15.4 Module BM15C, BM05C

Ver. 1.00 Jan. 2025

BM15C Series are powerful, highly flexible, ultra low power Bluetooth Low Energy (BLE) modules using Nordic nRF54L15 or nRF54L05 SoC. With an ARM Cortex™ M33 MCU at 128 MHz, up to 1.524MB flash, up to 256KB RAM, embedded 2.4GHz multi-protocol transceiver, and an integrated PCB trace antenna or a connection for an external antenna. It allows faster time to market with reduced development cost.

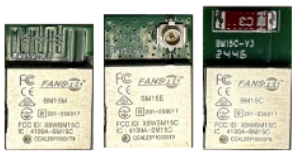

BM15C are designed to minimize PCB cost and to maximize efficiency in production line dedicated for Bluetooth modules. The cost of using BM15C modules can be lower than designing-in SoC at any quantity.

BM15Cs are footprint upgradeable to nRF54H20 BLE module BMH20Cs.

BM15C Specifications

BLE 6.0, IEEE 802.15.4-2006 Transceiver

- Complete RF solution with integrated antenna
  - BLE: 2Mbps, 1Mbps (-98 dBm sensitivity), 500kbps, 125kbps (-106 dBm sensitivity).
  - IEEE 802.15.4-2006: 250 kbps (-102 dBm sensitivity).
  - Proprietary: 4Mbps, 2Mbps, 1Mbps.
- Programmable TX power, -8 dBm +8 dBm.
- AoA and AoD direction finding using BLE.
- 128 bit AES/ECB/CCM/AAR co-processor (on-the-fly operation).
- 12.0 mW TX current at 0 dBm, 1Mbps, 1.8V VDD.
- 7.5 mW RX current, 1Mbps, 1.8V VDD.
- RSSI, 1 dB resolution

Platform Security

- Secure/non-secure memory protection.
- Symmetric and asymmetric key crypto accelerator.
- Secure key management.
- Tamper detection.
- Immutable boot partition.
- Debug access port protection.
- Two watchdog timers for secure and non-secure context.

MCU

- Nordic nRF54L with ARM Cortex M33, 128 MHz.
- Flash/RAM: 1524KB/256KB, or 500KB/96KB.
- 505 EEMAC CoreMark score running from non-volatile memory, 3.95 CoreMark per MHz.
- Single precision floating point unit (FPU).
- Memory protection unit (MPU).
- Digital signal processing (DSP) instructions.
- Serial Wire Debug (SWD)
- Data watchpoint and trace (DWT), embedded trace macrocell (ETM), instrumentation trace macrocell (ITM), and cross trigger interface (CTI).
- Trace port interface unit (TPIU), 4-bit parallel trace of ITM and ETM trace data; Serial wire output (SWO) trace of ITM data.

Peripherals

- Two realtime counters (RTC), and one global RTC (GRTC) that can run in System OFF mode and implement a shared system timer.
- Seven 32-bit timers with counter mode.
- Five fully featured serial interfaces with EasyDMA, supporting I²C, SPI controller/peripheral, and UART.
- Three pulse width modulator (PWM) units with Easy DMA.
- I2S two channel inter-IC sound interface.
- 14-bit at 20KS/s, 12 bit at 250KS/s, or 10-bit at 2MS/s ADC with up to eight programmable gain channels.
- Near field communication (NFC).
- Two quadrature decoders (QDEC).
- 38 LGA pins, 31 GPIOs.
- Embedded inductors for DCDC converter
- 1.7V to 3.6V supply.
- An external 32.768 KHz crystal is not required.
- Operation temperature: -40°C to +105°C

Certifications

- FCCID: X8WBM15C
- ISED ID: 4100A-BM15C
- CE, RCM: Compliant
- TELEC ID: 201-250017
- Taiwan NCC ID: See below
- QDID:

Model Summaries

module	BM15M	BM15C	BM15E	BM05M	BM05C
SoC	nRF54L15, 1524 KB flash; 256 KB RAM			nRF54L05, 500 KB flash; 96 KB RAM	
Size	10.0x14.0mm	10.0x15.8mm	10.0x15.0mm	10.0x14.0mm	10.0x15.8mm
Antenna	PCB Trace	Chip	U.FL for external	PCB Trace	Chip
Peak TX, conducted	+7.71 dBm	+7.71 dBm	+7.71 dBm		
Peak TX, radiated	+7.15 dBm	+12.01 dBm	+13.71 dBm		
BLE range,1Mbps	300M est.	900M, est.		300M est.	900M, est.
Certifications	BLE+802.15.4	BLE+802.15.4	BLE+802.15.4	BLE	BLE
Taiwan NCC ID	CCAL25Y10031T8	CCAL25Y10030T6	CCAL25Y10032T0		
Availability	Production	Production	Production	Q2, 2025	Q2, 2025

Table Of Contents

1. Introduction....3
BM15C Block Diagram....3
2. BM15C Specifications....5
Nordic SoCs....5
Mechanical Drawings....7
BM15C Pin Map....10
Pin Function Table....11
Mounting BM15M on the Host PCB....13
Suggestion for Battery Power Application....13
3. Upgrading to BMH20C or WiFi 6 Combo....14
WM02C15C pin map....14
BMH20C pin map....15
WM02CH20C pin map....16
Pin Function Table....17
4. Bluetooth Range Measurements....20
Measurement Results....20
5. Evaluation Board....21
Loading Firmware into Evaluation Board Through a Nordic DK....21
Evaluation Board Schematics....22
6. Firmware Development....23
Procedures to Load Firmware....23
Setting Up Firmware Development Environment....23
Using Internal Load Capacitors for the High Frequency Oscillator....25
Preloaded Firmware....25
7. Miscellaneous....26
Soldering Temperature-Time Profile for Re-Flow Soldering....26
Cautions, Design Notes, and Installation Notes....26
Packaging....29
FCC Label....29
8. Revision History....30
9. Contact Us....31

1. Introduction

BM15C module is powerful, highly flexible, ultra low power Bluetooth Low Energy (BLE) modules using Nordic nRF54L15 SoCs. With an ARM Cortex™ M33 MCU at 128 MHz, up to 1.524MB flash, 256KB RAM, embedded 2.4GHz multi-protocol transceiver, and an integrated antenna, it allows faster time to market with reduced development cost.
The following is a block diagram of BM15C. Antenna circuit and main clock are integrated. All 31 GPIOs of nRF54L15 can be accessed from main board. For lower power consumption at idle state, a 32.768 kHz crystal is added on the host board. Connection to an external NFC (Near Field Communication) antenna is provided.
In this data sheets, BM05C, BM05M, BM15C, BM15E, and BM15M are referred as BM15C.

BM15C Block Diagram

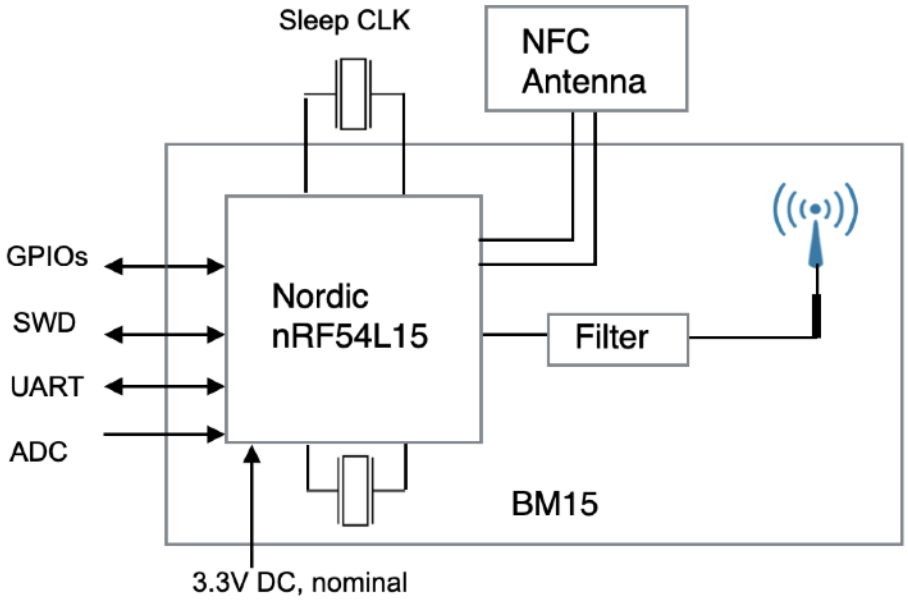

Summaries of BM15C Series modules.

BM15M

- BM15M: uses an nRF54L15 SoC.
- Cortex M33 MCU at 128 MHz, 1524KB flash, 256 KB RAM
- Integrated PCB trace antenna
- Size: 10.0x14.0mm

BM15E

- BM15: uses an nRF54L15 SoC.
- Cortex M33 MCU at 128 MHz, 1524KB flash, 256 KB RAM
- An u.FL connector for external antenna
- Size: 10.0x15.0mm.

BM15C

- BM15C: uses an nRF54L15 SoC.

- Cortex M33 MCU at 128 MHz, 1524KB flash, 256 KB RAM
- Integrated high performance chip antenna
- Size: 10.0x15.8mm

BM05C

- BM05C: uses an nRF54L05 SoC.
- Cortex M33 MCU at 128 MHz, 500KB flash, 96 KB RAM
- Integrated high performance chip antenna
- Size: 10.0x15.8mm

BM05M

- BM05M: uses an nRF54L05 SoC.
- Cortex M33 MCU at 128 MHz, 500KB flash, 96 KB RAM
- Integrated PCB trace antenna
- Size: 10.0x14.0mm

2. BM15C Specifications

Nordic SoCs

A block diagram of nRF54L15 is below. This is an ultra-low power SoC with advanced security features, a range of peripherals, and a multiple protocol 2.4 GHz transceiver. It supports Bluetooth Low Energy (BLE), IEEE 802.15.4 for Thread and Zigbee protocols, and allows for the implementation of proprietary 2.4 GHz protocols.

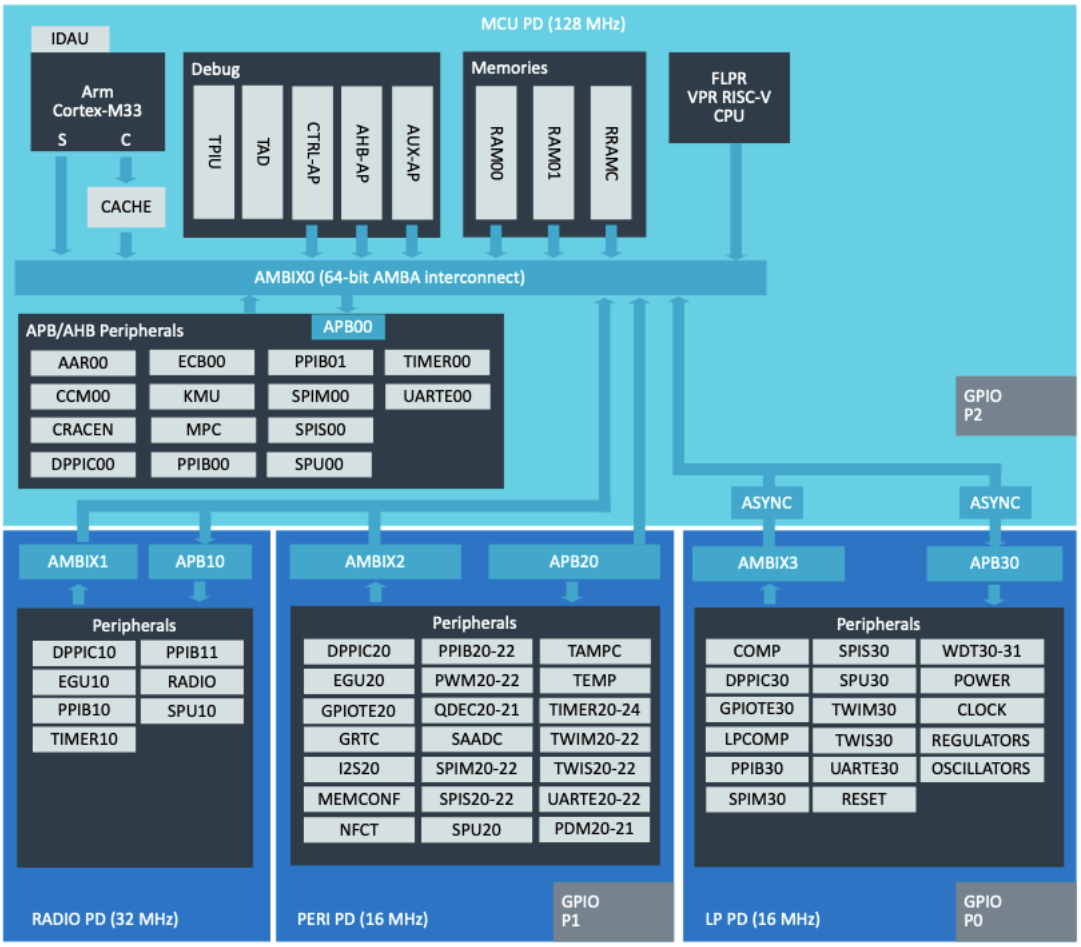

The main processing unit is an ARM Cortex M33 processor running at up to 128 MHz, supported by nonvolatile RRAM and RAM memory. The ARM Cortex M33 has a full set of digital processing (DSP) instructions and a memory protection unit (MPU) for application security. The full-featured single-precision floating-point unit (FPU) supports all single-precision instructions.

The peripheral set offers a variety of analog and digital functionality enabling single chip implementation of a wide range of applications. Hardware isolation between the secure and non-secure resources, as defined by ARM TrustZone, is implemented in the device. The hardware peripherals can be configured as secure or non-secure.

A key management unit (KMU) provides key storage, that when combined with a cryptographic accelerator (CRACEN), ensures discretion of encryption keys even within the secure world. The cryptographic accelerator has protection against differential power analysis (DPA) attacks.

The device has measures to protect against physical security attacks. It can detect and report fault injection attacks such as voltage glitching or electromagnetic fault injection. An external active shield I/O interface provides PCB or product level security for the detection of a product's encapsulation being opened, or product tampering.

The device non-volatile memory has a boot region that can be made immutable before the CPU starts up. Boot initiated from an immutable source allows subsequent boot steps to be performed by authenticated code.

The debug access port can be enabled or disabled to allow either non-intrusive or intrusive debugging, from secure or non secure worlds. The non volatile memory can be protected against erasing, providing protection from unauthenticated repurposing. Authenticated debug access control, such as facilitating the ARM ADAC architecture, is supported through a hardware mailbox. The mailbox allows on-chip firmware to authenticate the debug host before enabling the device debug interface.

The device has a dedicated RISC-V CPU (VPR), which is a fast, lightweight peripheral processor (FLPR) dedicated for software defined peripherals.

Mechanical Drawings

The following is mechanical drawings of BM15C and BM05C, top view.

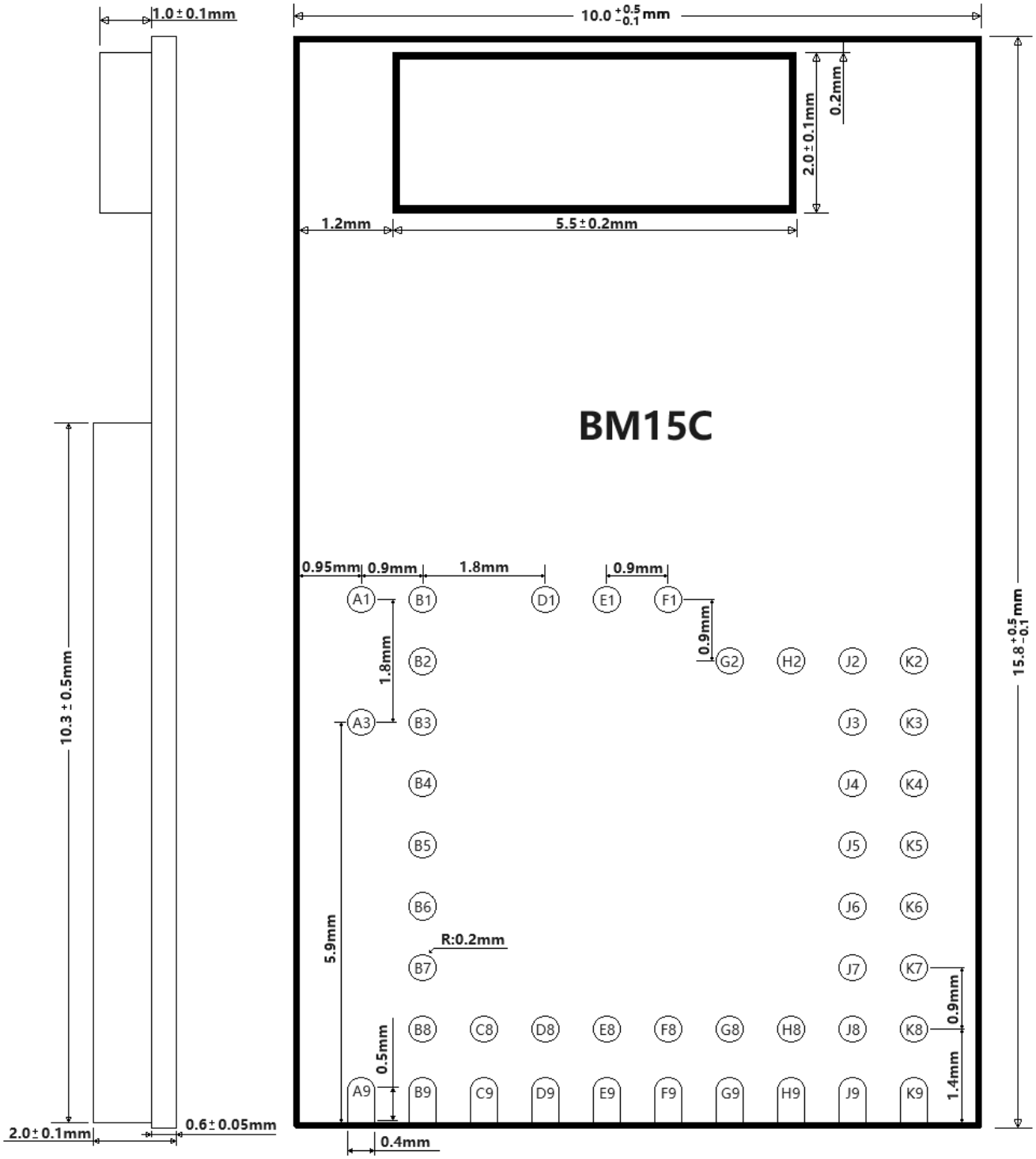

The following is mechanical drawings of BM15M and BM05M, top view.

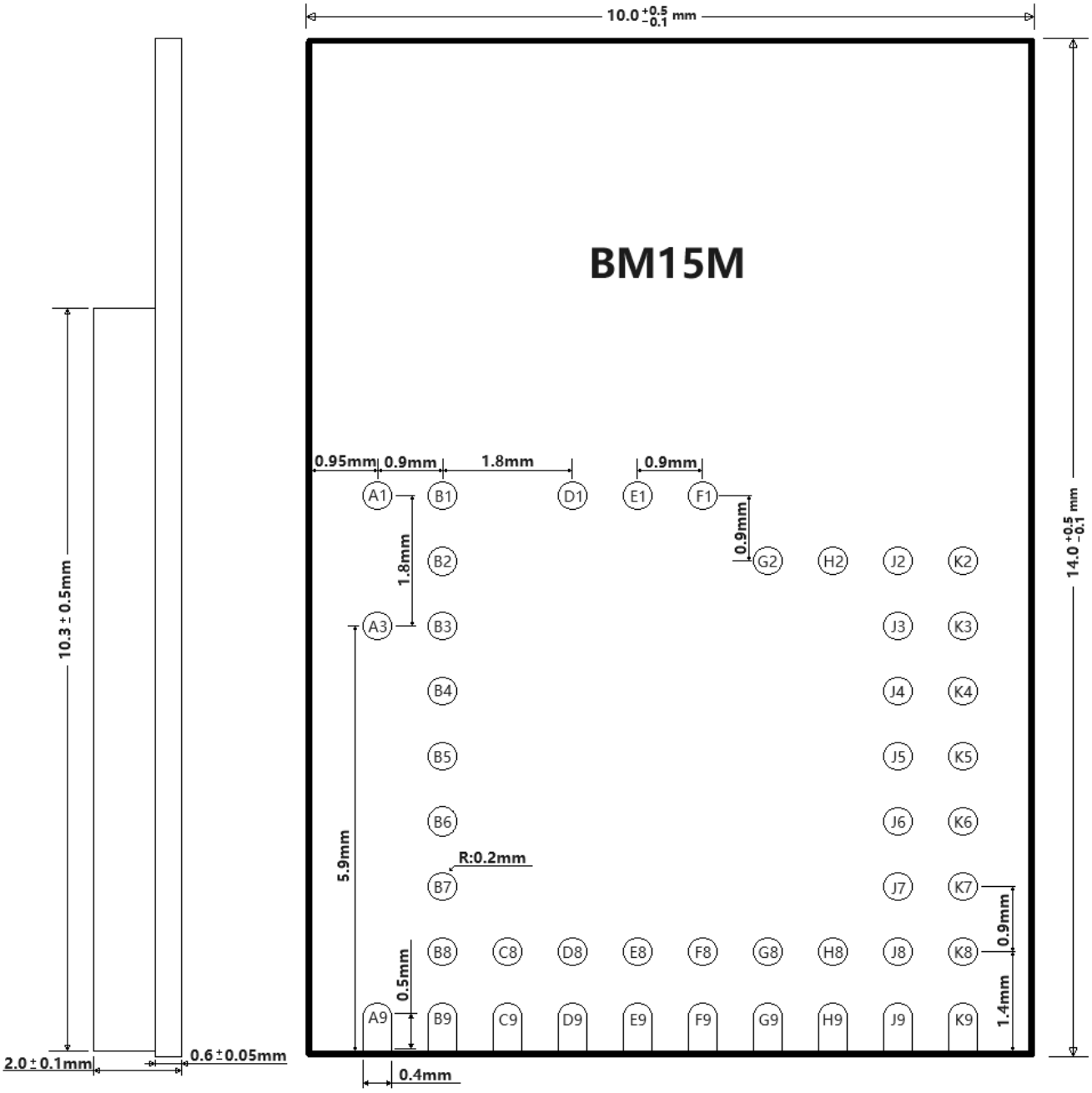

The following is mechanical drawings of BM15E, top view.

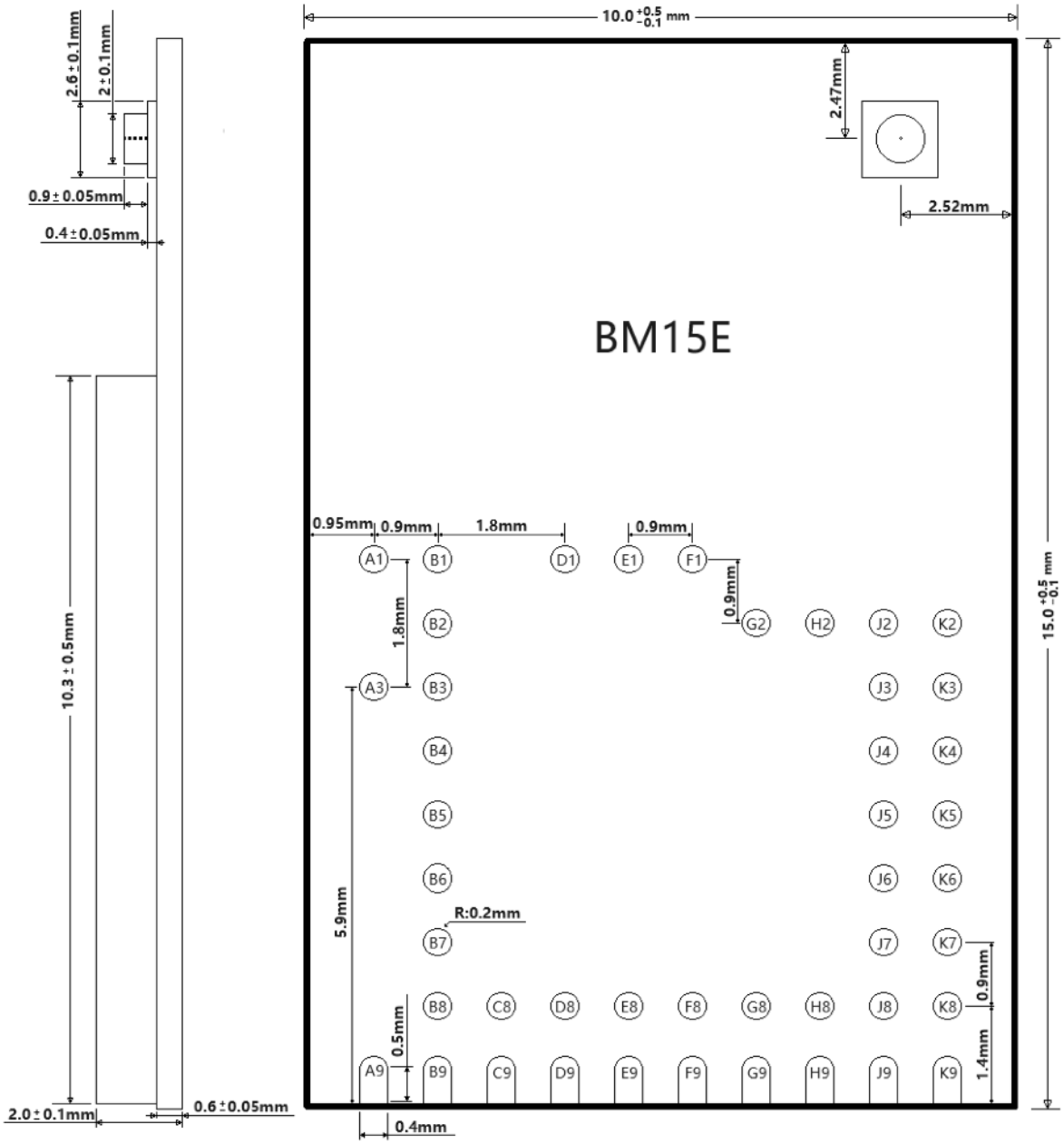

BM15C Pin Map

The following is a pin map of BM15C Series modules.

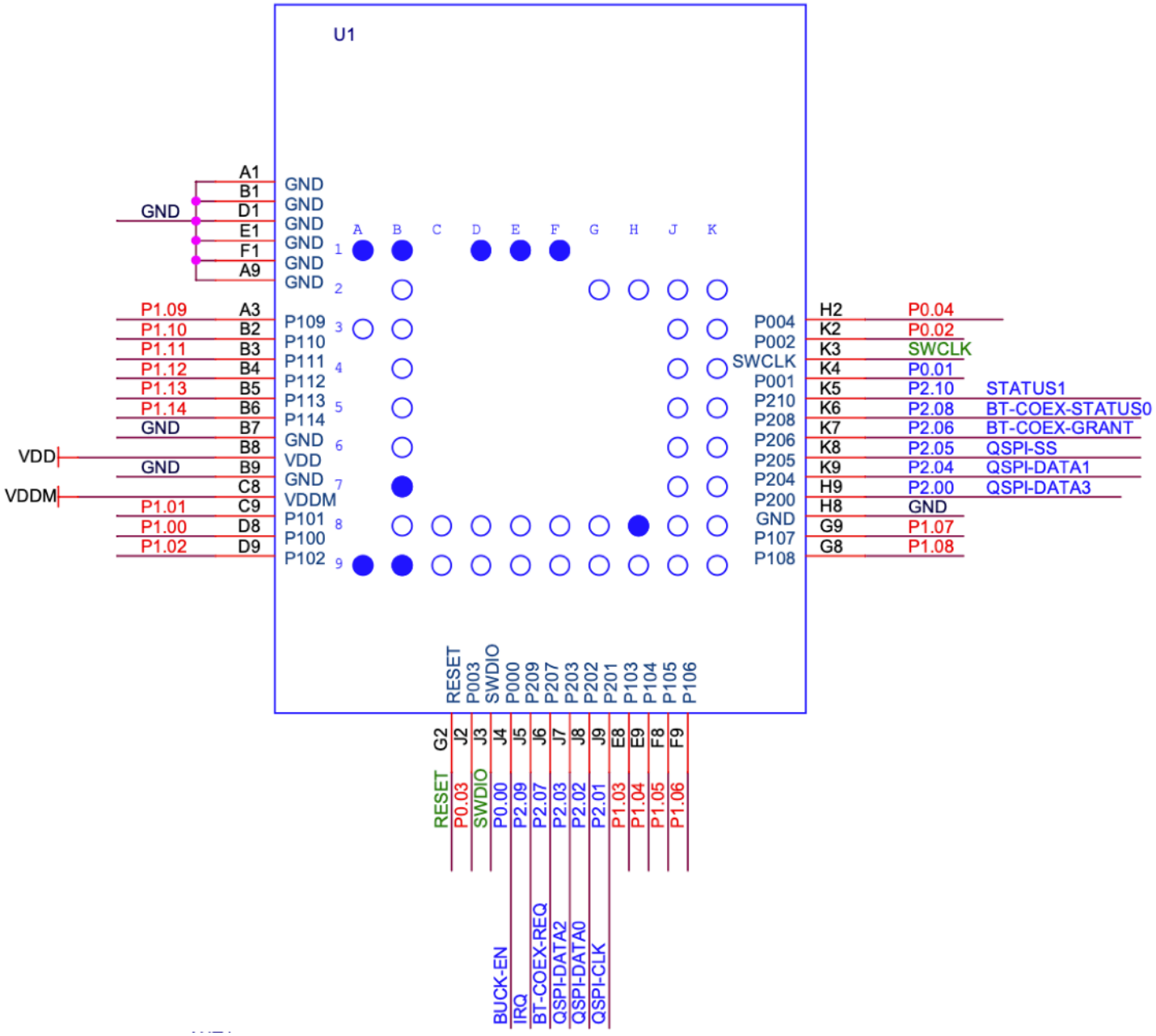

Pin Function Table

In this section, the following abbreviations are used.

- BM15, an nRF54L15 Bluetooth module representing BM15M, BM15C, BM15E, BM05C, BM05M.
- L15, nRF54L15 or nRF54L05.

BM15	L15		
pin#	pin#	Name	Descriptions
A1		GND	Ground
A3	37	P109	GPIO
A9		GND	Ground
B1		GND	Ground
B2	38	P110	GPIO
B3	39	P111	GPIO, Analog input AIN4;
B4	40	P112	GPIO, Analog input AIN5;
B5	41	P113	GPIO, Analog input AIN6;
B6	42	P114	GPIO, Analog input AIN7;
B7	49	GND	Ground
B8	36	VDD	1.7V to 3.6V;
B9	49	GND	Ground
C8	48	VDD	Main power supply, 3V nominal, 1.7V to 3.6V.
C9	2	P101	GPIO, connection for 32.768 kHz crystal
D1		GND	Ground
D8	1	P100	GPIO, connection for 32.768 kHz crystal
D9	3	P102	GPIO, NFC pin.
E1		GND	Ground
E8	4	P103	GPIO
E9	5	P104	GPIO, Analog input AIN0;
F1		GND	Ground
F8	6	P105	GPIO, Analog input AIN1;
F9	7	P106	GPIO, Analog input AIN2;
G2	30	/Reset	/Reset, active low.
G8	9	P108	GPIO
G9	8	P107	GPIO, Analog input AIN3
H2	29	P004	GPIO
H8	49	GND	Ground
H9	11	P200	GPIO
J2	28	P003	GPIO
J3	25	SWDIO	Serial Wire Debug data.
J4	23	P000	GPIO;
J5	20	P209	GPIO;
J6	18	P207	GPIO;
J7	14	P203	GPIO;
J8	13	P202	GPIO;
J9	12	P201	GPIO;
K2	27	P002	GPIO

K3	26	SWDCLK	Serial Wire Debug clock
K4	24	P001	GPIO;
K5	21	P210	GPIO;
K6	19	P208	GPIO;
K7	17	P206	GPIO;
K8	16	P205	GPIO;
K9	15	P204	GPIO;

Mounting BM15M on the Host PCB

BM15C or BM15M with an integrated antenna is referred as BM15M in this section. It shall follow these mounting guidelines. There is no mounting restriction for BM15E with an u.FL connector.

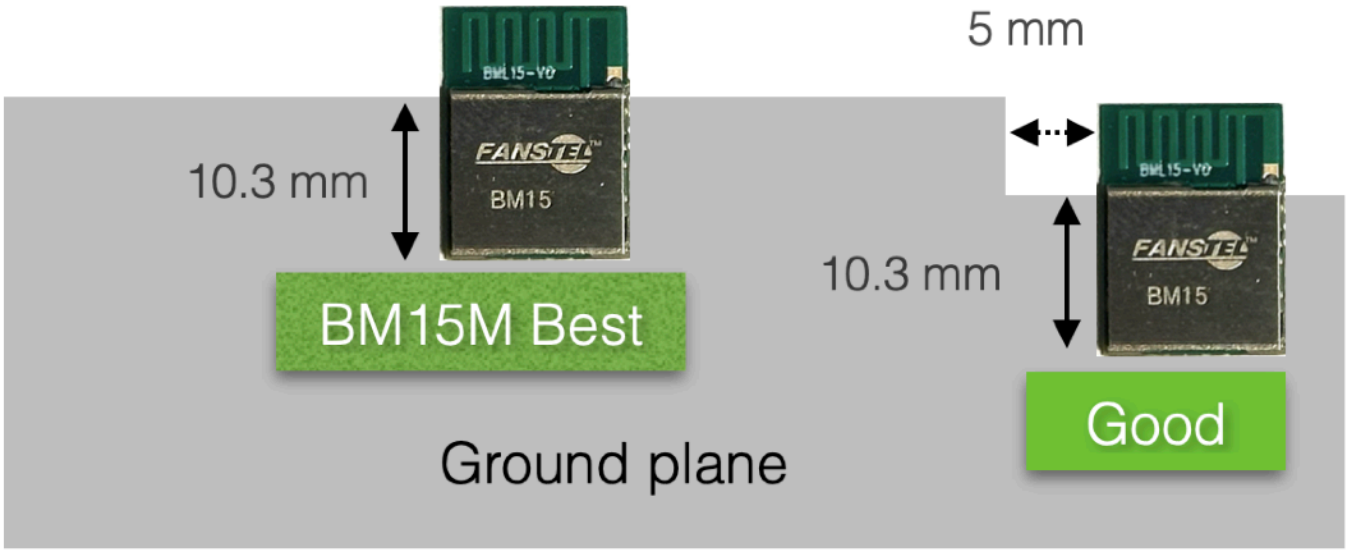

The length of the RFI shield is 10.3 mm. The RFI shield area is the main body of module. The rest of the module is called antenna area.

- The main body area can be on a host board ground plane. The antenna area must be extended outside of the host board or in an area without ground or signal trace.
- The length of BM15C antenna area is 5.5 mm.
- The length of BM15M antenna area is 3.7mm.
- We don't recommend mounting BM15M module in the middle of a host PCB.

For the best Bluetooth range performance, keep all external metal at least 30mm from the antenna area.

Suggestion for Battery Power Application

Standby current consumption is important for battery-powered product. We suggest adding a 32.768 kHz crystal as shown in the evaluation board schematics. The 32MHz main clock won't be active at idle state to save power.
Two inductors required for DCDC converter are inside BM15 module. You can enable DCDC to lower power consumption.

3. Upgrading to BMH20C or WiFi 6 Combo

Use information in this section to design a host PCB that is upgradeable to support an nRF54H20 module, an nRF54H20 + nRF7002 combo module, or an nRF54L15 + nRF7002 combo module.

WM02C15C pin map

The pin map of WM02C15C, an nRF7002 + nRF54L15 combo module is below. Use this pin map to design-in BM15C for possible upgrade to support WiFi 6.

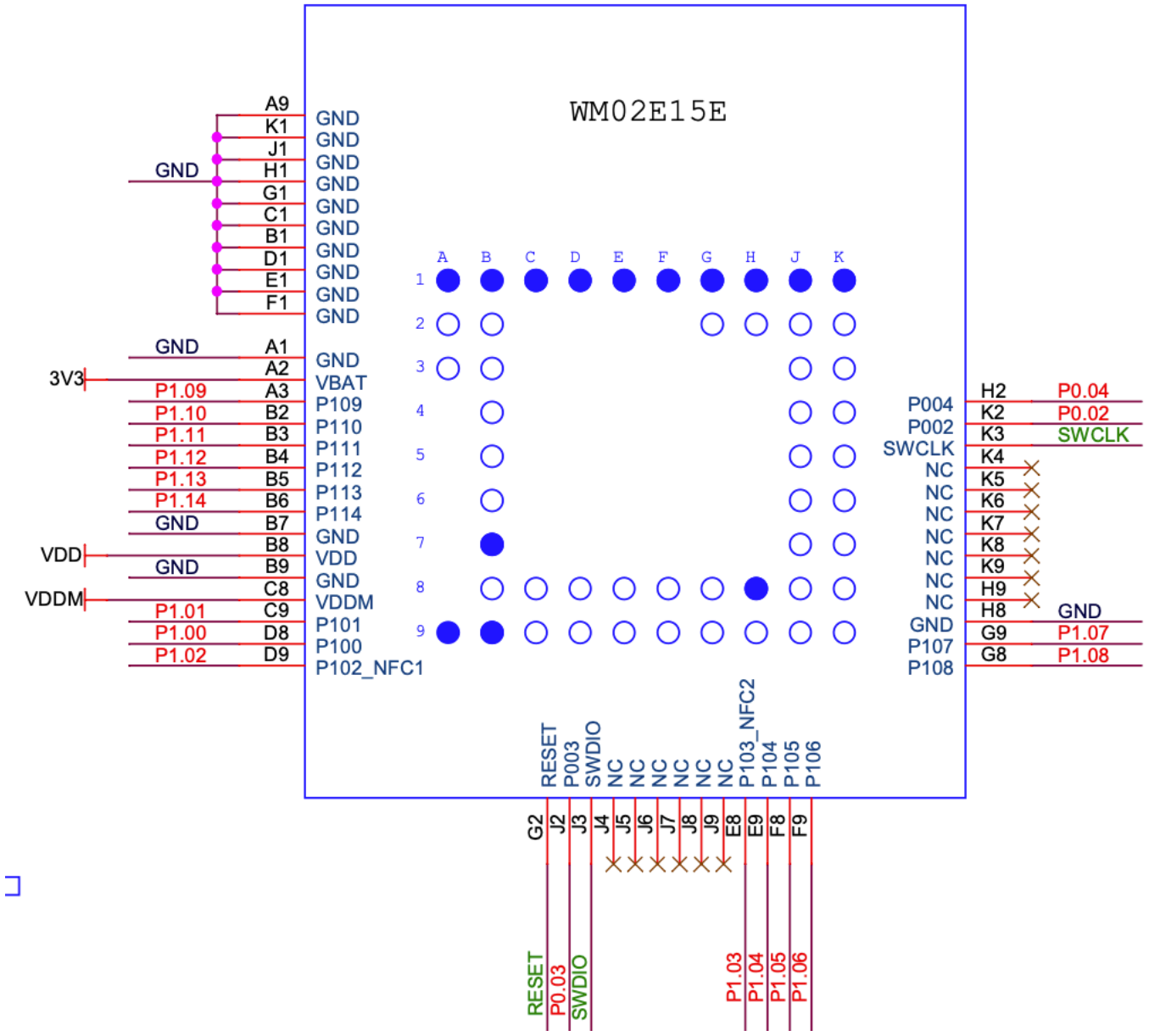

BMH20C pin map

BMH20C is an nRF54H20 module with 64 GPIO pins. Use this pin map to design-in BM15C for possible upgrade to BMH20C.

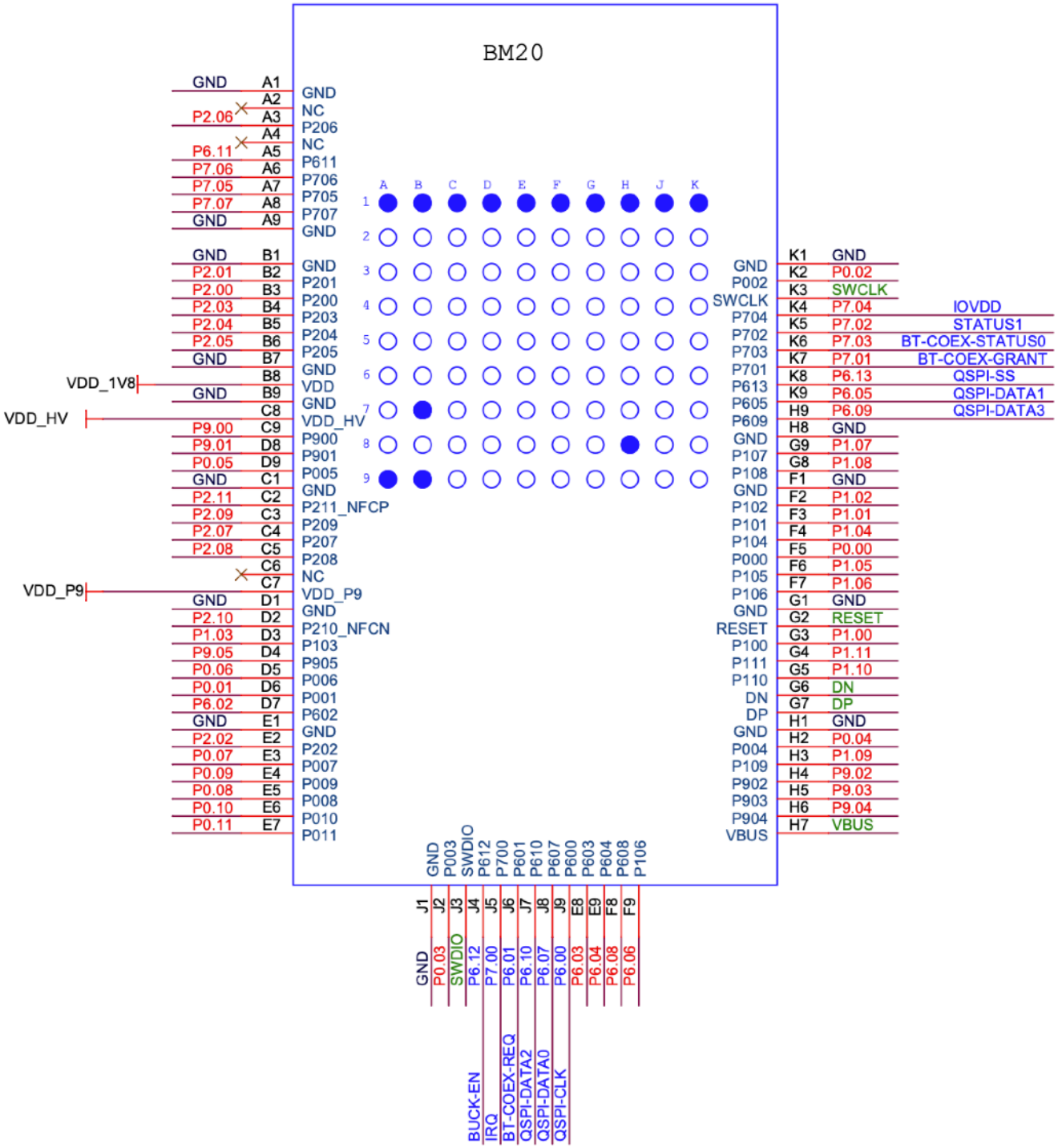

WM02CH20C pin map.

WM02CH20C is an nRF54H20 and nRF7002 WiFi 6 combo module. Use this pin map for possible upgrade to WM02CH20C.

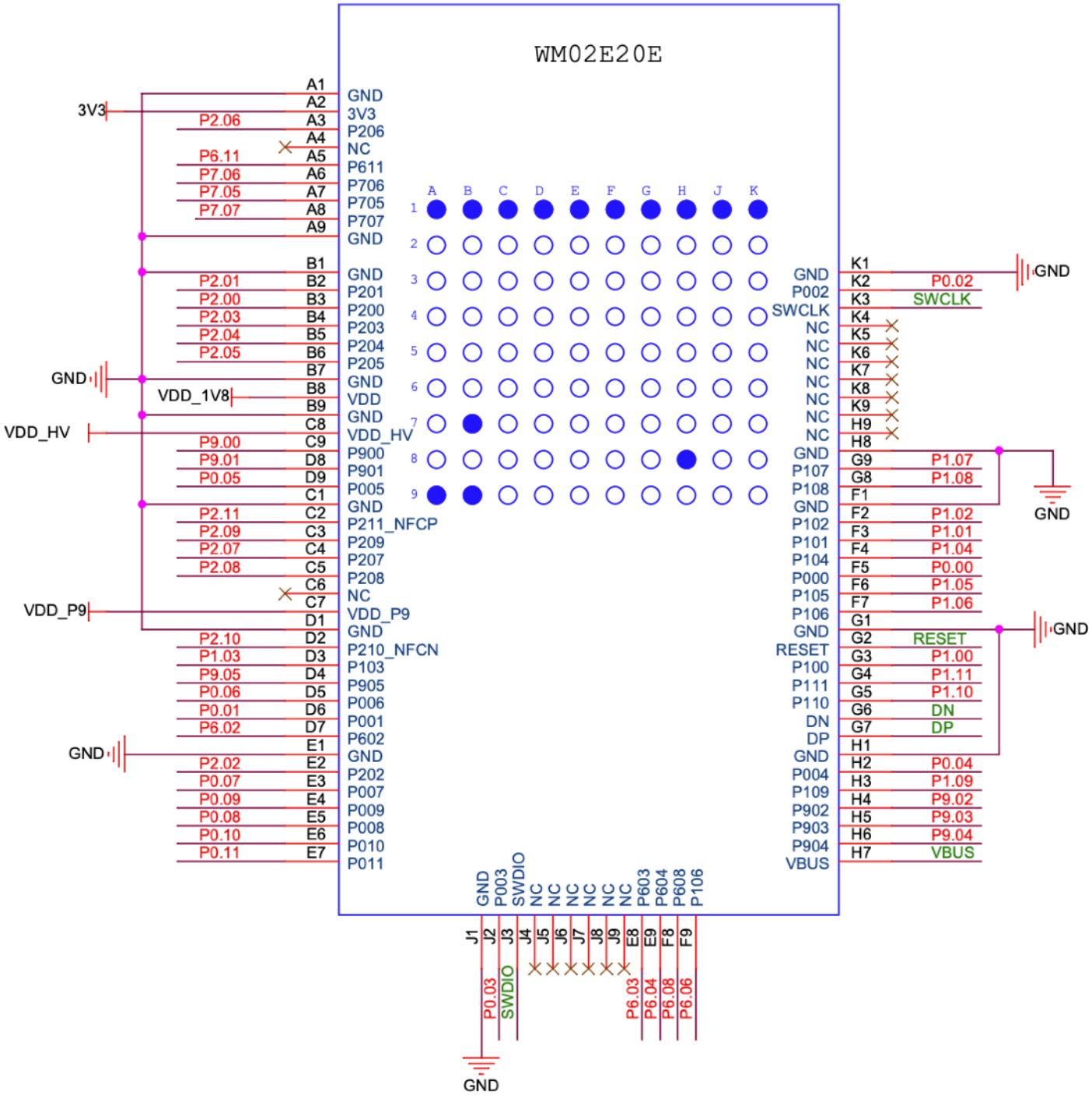

Pin Function Table

In this section, the following abbreviations are used.

- BM15, an nRF54L15 Bluetooth module representing BM15M, BM15C, BM15E.
- WM15, an nRF54L15 + nRF7002 Bluetooth and WiFi 6 combo module representing WM02C15C, WM02E15M, WM02E15E, and WM02P15P.
- BM20, an nRF54H20 Bluetooth module representing BMH20M, BMH20C, BMH20E.
- WM20, an nRF54H20 +nRF7002 Bluetooth and WiFi 6 combo module representing WM02CH20C, WM02EH20C, WM02EH20E, and WM02PH20P.
- L15, nRF54L15.
- H20, nRF54H20.

BM15	L15		BM20	H20		
pin#	pin#	Name	pin#	pin#	Name	Descriptions
A1		GND	A1			Ground
A2		3V3	A2		3V3	BM15,BM20,NC; WM15,WM20 3.3V power to nRF7002.
A3	37	P109	A3	J2	P206	BM20,WM20, GPIO
			A4			
			A5	M7	P611	BM20,WM20, DQ2
			A6	J10	P706	BM20,WM20, GPIO
			A7	J11	P705	BM20,WM20, GPIO
			A8	J9	P707	BM20,WM20, GPIO
A9		GND	A9		GND	Ground
B1		GND	B1		GND	Ground
B2	38	P110	B2	G3	P201	GPIO
B3	39	P111	B3	F3	P200	GPIO, BM15,WM15,Analog input AIN4;
B4	40	P112	B4	H3	P203	GPIO, BM15,WM15,Analog input AIN5;
B5	41	P113	B5	H2	P204	GPIO, BM15,WM15,Analog input AIN6;
B6	42	P114	B6	J3	P205	GPIO, BM15,WM15,Analog input AIN7;
B7	49	GND	B7		GND	Ground
B8	36	VDD	B8	L4	VDD	BM15,WM15, 1.7V to 3.6V; BM20,WM20, 1.8V supply to GPIOs except port 9, 1.7V to 1.98V.
B9	49	GND	B9		GND	Ground
C1			C1		GND	BM15,NC; WM15,BM20,WM20 ground;
			C2	J1	P211	GPIO, BM20,WM20 NFC-P;
			C3	K1	P209	BM20,WM20, GPIO
			C4	K3	P207	BM20,WM20, GPIO
			C5	K2	P208	BM20,WM20, GPIO
			C6		NC	
			C7	A12	VDD_P9	BM20,WM20, DC power supply to set port 9 GPIO voltage, 3.3V nominal, 1.62V to 3.6V.
C8	48	VDDM	C8	L1	VDD_HV	Main power supply; BM15,WM15, 3V nominal, 1.8V to 3.6V; BM20,WM20, 3V nominal, 1.9V to 5.5V.
C9	2	P101	C9	A11	P900	GPIO, BM15,WM15,connection for 32.768 kHz crystal
D1		GND	D1		GND	Ground

			D2	H1	P210	GPIO, BM20,WM20,NFC-N.
			D3	E5	P103	BM20,WM20, GPIO
			D4	C10	P905	BM20,WM20, GPIO
			D5	E10	P006	BM20,WM20, GPIO
			D6	D11	P001	BM20,WM20, GPIO
			D7	M11	P602	GPIO, BM20,WM20,RWDS.
D8	1	P100	D8	A10	P901	GPIO, BM15,WM15, connection for 32.768 kHz crystal
D9	3	P102	D9	E11	P005	GPIO, BM15,WM15,NFC pin.
E1		GND	E1		GND	Ground
			E2	G2	P202	BM20,WM20, GPIO
			E3	E9	P007	BM20,WM20, GPIO
			E4	F10	P009	BM20,WM20, GPIO
			E5	F11	P008	BM20,WM20, GPIO
			E6	F9	P010	BM20,WM20, GPIO
			E7	G8	P011	BM20,WM20, GPIO
E8	4	P103	E8	K12	P603	GPIO, BM15,WM15,NFC pin; BM20,WM20,CS0
E9	5	P104	E9	L11	P604	GPIO, BM15,WM15,Analog input AIN0; BM20,WM20,DQ7
F1		GND	F1		GND	Ground
			F2	E4	P102	BM20,WM20, GPIO
			F3	D4	P101	BM20,WM20, GPIO
			F4	D5	P104	BM20,WM20, GPIO
			F5	C9	P000	BM20,WM20, GPIO
			F6	C5	P105	BM20,WM20, GPIO
			F7	B5	P106	BM20,WM20, GPIO
F8	6	P105	F8	L9	P608	GPIO, BM15,WM15,Analog input AIN1; BM20,WM20,DQ5
F9	7	P106	F9	L10	P606	GPIO, BM15,WM15,Analog input AIN2; BM20,WM20,DQ6
G1		GND	G1		GND	BM15,NC; WM15,BM20,WM20, ground;
G2	30	/Reset	G2	L7	/Reset	/Reset, active low.
			G3	B4	P100	BM20,WM20, GPIO
			G4	C6	P111	BM20,WM20, GPIO
			G5	B6	P110	BM20,WM20, GPIO
			G6	B8	DN	BM20,WM20, USB port Data
			G7	B7	DP	BM20,WM20, USB port Data
G8	9	P108	G8	D6	P108	BM20,WM20, GPIO
G9	8	P107	G9	A5	P107	GPIO, Analog input AIN3
H1		GND	H1		GND	BM15,NC; WM15,BM20,WM20, ground;
H2	29	P004	H2	D8	P004	BM20,WM20, GPIO
			H3	A6	P109	BM20,WM20, GPIO
			H4	B11	P902	BM20,WM20, GPIO
			H5	B10	P903	BM20,WM20, GPIO
			H6	C11	P904	BM20,WM20, GPIO
			H7	A9	VBUS	BM20,WM20, USB power supply, 5V nominal, 4.4V to 5.5V.
H8	49	GND	H8		GND	Ground
H9	11	P200	H9	M8	P609	GPIO, BM20,WM20,DQ3
J1		GND	J1		GND	BM15,NC; WM15,BM20,WM20, ground;

J2	28	P003	J2	D9	P003	GPIO
J3	25	SWDIO	J3	G12	SWDIO	Serial Wire Debug data.
J4	23	P000	J4	L7	P612	GPIO; WM15,WM20, NC, internal, BUCK-EN to 7002; BM20, /Reset for QSPI memory.
J5	20	P209	J5	G11	P700	GPIO; WM15,WM20, NC, internal, IRQ to 7002;
J6	18	P207	J6	L12	P601	GPIO; WM15,WM20, NC, internal BT-COEX-REQ;
J7	14	P203	J7	L8	P610	GPIO; WM15,WM20, NC, internal QSPI DATA2
J8	13	P202	J8	M9	P607	GPIO; WM15,WM20, NC, internal QSPI DATA0
J9	12	P201	J9	M12	P600	GPIO; WM15,WM20, NC, internal QSPI CLK;
K1		GND	K1		GND	BM15,NC; WM15,BM20,WM20, ground;
K2	27	P002	K2	D10	P002	GPIO
K3	26	SWDCLK	K3	F12	SWDCLK	Serial Wire Debug clock
K4	24	P001	K4	H9	P704	GPIO; WM15,WM20, NC, internal control power IOVDD to 7002.
K5	21	P210	K5	H11	P702	GPIO; WM15,WM20, NC, internal STATUS1
K6	19	P208	K6	H10	P703	GPIO; WM15,WM20, NC, internal STATUS0
K7	17	P206	K7	G10	P701	GPIO; WM15,WM20, NC, internal COEX GRANT
K8	16	P205	K8	K7	P613	GPIO; WM15,WM20, NC, internal QSPI SS;
K9	15	P204	K9	M10	P605	GPIO; WM15,WM20, NC, internal QSPI DATA1;

4. Bluetooth Range Measurements

Bluetooth range measurement hex codes can be downloaded from **Bluetooth Range Measurements** section of this webpage.

To be provided.

Description of measurement site, measurement methods, and range raw data are available at:

https://www.fanstel.com/testreport/

Measurement Results

To be provided.

5. Evaluation Board

An evaluation board can be used to evaluate performance of module and to develop and test your firmware before an application-specific host board is developed.

Loading Firmware into Evaluation Board Through a Nordic DK

A Nordic nRF54L15 PDK or DK is required to load firmware into EV-BM15.

Procedures to connect a Nordic DK to a Fanstel nRF54 module evaluation board.

- Connect Nordic nRF54L15 DK debug out to Fanstel evaluation board debug in using the 10-pin flat cable as shown below.
- Connect Nordic nRF4L15 DK to PC.
- Connect a DC power source to micro or mini USB port of evaluation board.

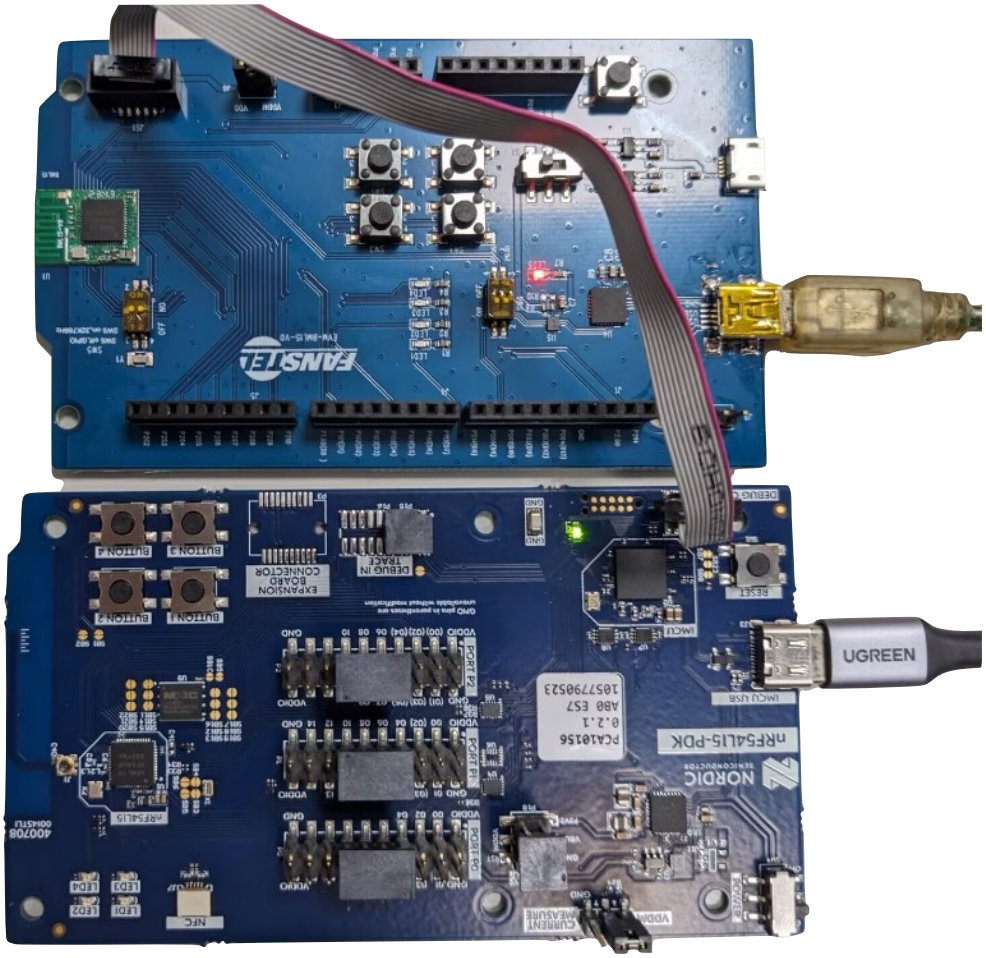

Evaluation Board Schematics

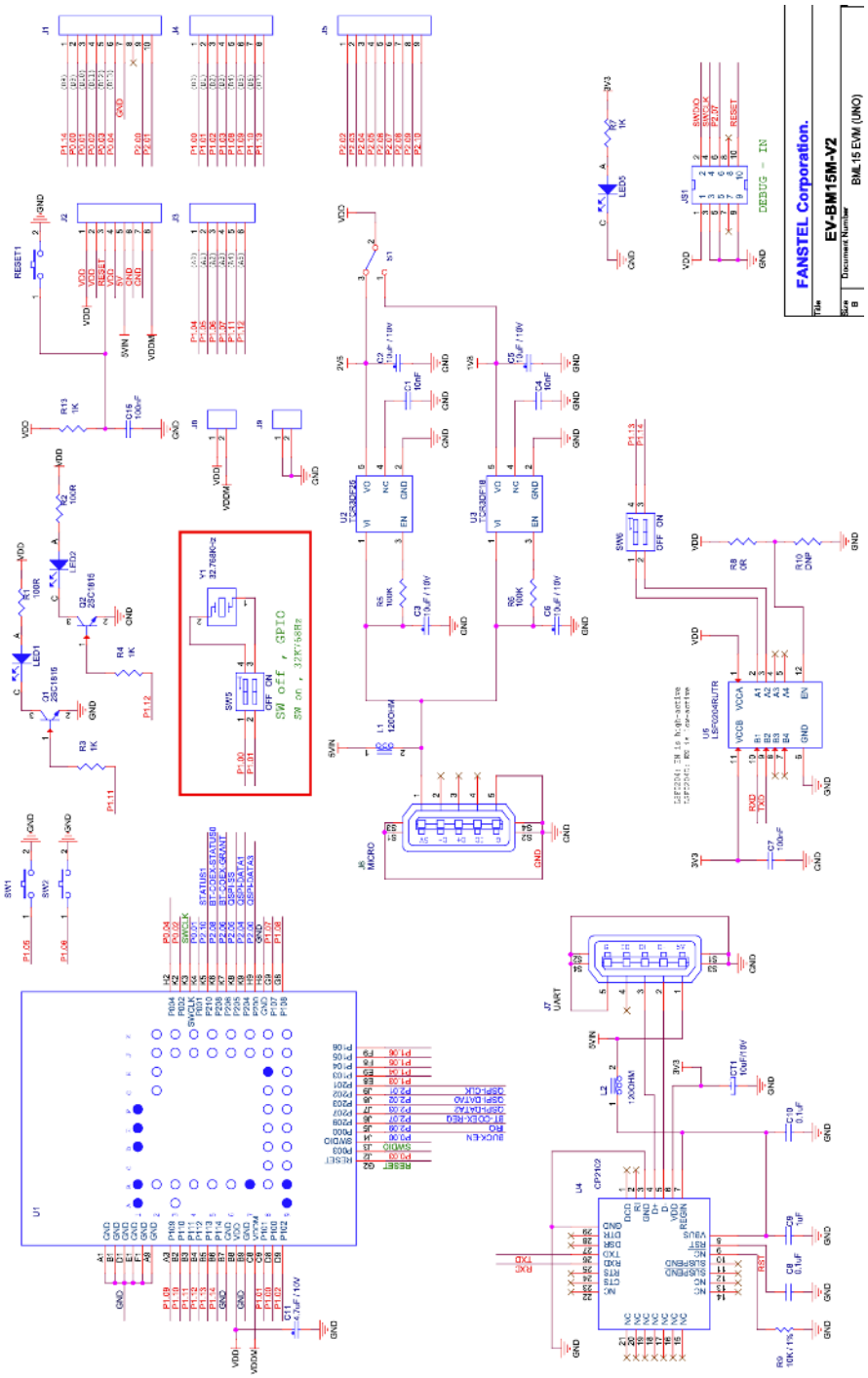

6. Firmware Development

Procedures to Load Firmware

EV-BM15 hex codes and source codes can be downloaded from the Fanstel website.

Open command line tool and execute the programming commands.

nrfjprog -f NRF54L --recover

nrfjprog -f NRF54L --program BML15_231129.hex --chiperase --verify —reset

```
C:\Users\Leo\Desktop\Nordic_Firmware\BML15_231129\HEX>nrfjprog -f NRF54L --recover
Recovering device. This operation might take 30s.
Erasing user code and UICR flash areas.

C:\Users\Leo\Desktop\Nordic_Firmware\BML15_231129\HEX>nrfjprog -f NRF54L --program BML15_231129.hex --chiperase --verify
 --reset
[ ##################### ]   0.261s | Erase file - Done erasing
[ ##################### ]   3.951s | Program file - Done programming
[ ##################### ]   1.720s | Verify file - Done verifying
Applying system reset.
Run.

C:\Users\Leo\Desktop\Nordic_Firmware\BML15_231129\HEX>
```

Setting Up Firmware Development Environment

Please use nRF Connect SDK version 2.8.0 or newer for development. The previous versions of nRF Connect SDK do not support the BM15C. Please select the board nrf54l15dk/nrf54l15/cupapp. nRF54L15 silicon.

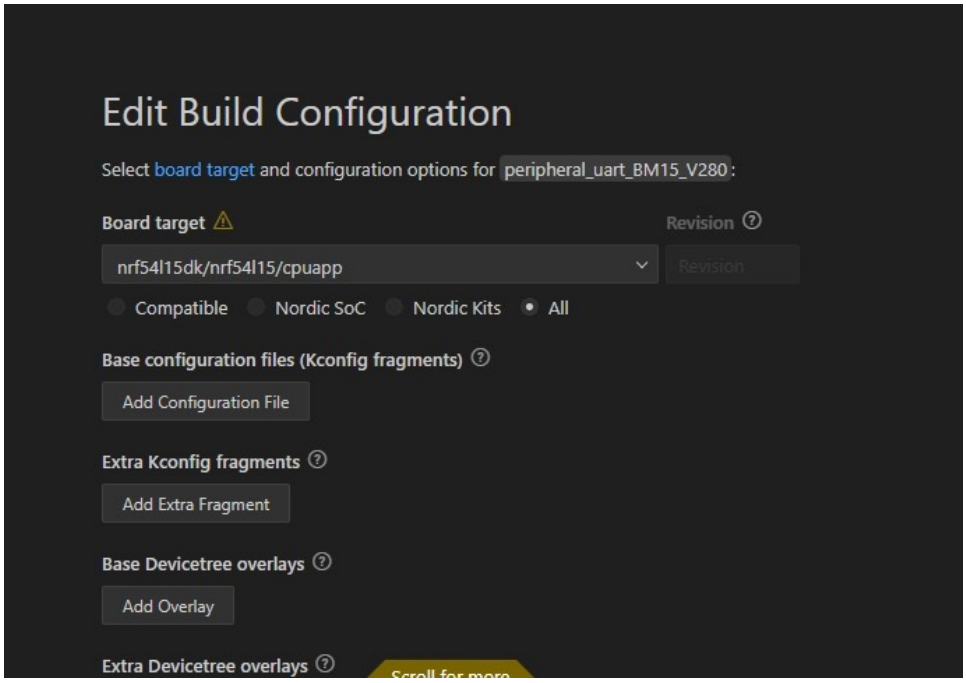

Create an overlay file to configure the hardware peripherals to match your specific hardware. The following is an example setup for the nrf54l15dk/nrf54l15.overlay file.

```
//-------------------------------------------------------
//OSC32KRC.INTCAP 0x50120904
//"nordic,nrf-lfxo".yaml([4000:18000] ,step 500)
&lfxo {
    load-capacitors = "internal";
    load-capacitance-femtofarad = <15500>;
};

&pinctrl {
    /omit-if-no-ref/ uart20_default: uart20_default {
        group1 {
            psels = <NRF_PSEL(UART_TX, 1, 13)>;
        };
        group2 {
            psels = <NRF_PSEL(UART_RX, 1, 14)>;
            bias-pull-up;
        };
    };

    /omit-if-no-ref/ uart20_sleep: uart20_sleep {
        group1 {
            psels = <NRF_PSEL(UART_TX, 1, 13)>,
                <NRF_PSEL(UART_RX, 1, 14)>;
            low-power-enable;
        };
    };
};

&uart20 {
    status = "okay";
    current-speed = <115200>;
    pinctrl-0 = <&uart20_default>;
    pinctrl-1 = <&uart20_sleep>;
    pinctrl-names = "default", "sleep";
```

After completing the setup, build and flash the code. Ensure that the code is running properly.

```
Restore: CONFIG_MBEDTLS_PSA_CRYPTO_C: True
Restore: CONFIG_MBEDTLS_PSA_CRYPTO_KEY_ID_ENCODES_OWNER: False
Restore: CONFIG_MBEDTLS_PSA_CRYPTO_SPM: False
Restore: CONFIG_MBEDTLS_USE_PSA_CRYPTO: True
Restore: CONFIG_MBEDTLS_PLATFORM_PRINTF_ALT: False
Restore: CONFIG_MBEDTLS_THREADING: False
Restore: CONFIG_MBEDTLS_THREADING_ALT: True
========== End psa_crypto_library_config ==============
CMake Warning at C:/nRF91_241105_V280/v2.8.0/zephyr/CMakeLists.txt:2134 (message):
  __ASSERT() statements are globally ENABLED


-- Configuring done
-- Generating done
-- Build files have been written to: C:/MyNordicTestV280/peripheral_uart_BM15_V280/build/peripheral_uart_BM15_V280
-- Configuring done
-- Generating done
-- Build files have been written to: C:/MyNordicTestV280/peripheral_uart_BM15_V280/build
[68/68] Linking C executable zephyr\zephyr.elf
Memory region         Used Size  Region Size  %age Used
           FLASH:      240056 B      1420 KB     16.51%
             RAM:       37044 B       188 KB     19.24%
        IDT_LIST:          0 GB        32 KB      0.00%
Generating files from C:/MyNordicTestV280/peripheral_uart_BM15_V280/build/peripheral_uart_BM15_V280/zephyr/zephyr.elf for
[5/5] Generating ../merged.hex
 * Terminal will be reused by tasks, press any key to close it.
```

Use RTT Viewer or UART to monitor the logs and confirm that the code is functioning as expected.

```
00>                                         40 c2 f3 32                                        |@..2
00> [00:00:00.021,489] <inf> bt_hci_core: HW Platform: Nordic Semiconductor (0x0002)
00> [00:00:00.021,506] <inf> bt_hci_core: HW Variant: nRF54Lx (0x0005)
00> [00:00:00.021,520] <inf> bt_hci_core: Firmware: Standard Bluetooth controller (0x00) Version 254.63788 Build 573996906
00> [00:00:00.021,954] <inf> bt_hci_core: No ID address. App must call settings_load()
00> [00:00:00.021,962] <inf> peripheral_uart: Bluetooth initialized
00> [00:00:00.022,481] <inf> bt_hci_core: Identi0m
00> [0m
```

Using Internal Load Capacitors for the High Frequency Oscillator

The external load capacitors for the 32MHz crystal are not mounted. An Epson or equivalent +/-10 PPM crystal is connected to XC1 and XC2 pins. The Bluetooth signal frequencies are within specifications if the internal load capacitors are not enabled. Use the following procedures to set the internal load capacitors to:

The internal load capacitors can be programmed from 4.0 pF to 17pF in 0.5 pF steps. The addresses and description of registers for programming the value of load capacitors are from the nRF54L15 product specifications.

To set up the internal capacitance, please configure it in the overlay file.

```
XOSC32M.CONFIG.INTCAP step 0.25 pf
&hfxo {
        load-capacitors = "internal";
        load-capacitance-femtofarad = <17000>;
};

XOSC32KI.INTCAP step 0.5 pf
&lfxo {
   load-capacitors = "internal";
   load-capacitance-femtofarad = <7000>;
};
```

Read the memory back to confirm.

nrfjprog --memrd 0x5012071C

The internal load capacitance shall be set to 17 pF for BM15C, BM15E, and BM15M modules.

Preloaded Firmware

The module is preloaded with firmware designed for factory testing purposes.The firmware is based on the Nordic NUS example.The preloaded source codes can be downloaded from the following link:

https://www.dropbox.com/scl/fi/o9jebdh7hfmvn1cwd769m/32M_CL-8pF-32K_CL-9pF-BlueNor_v280_BM15M_241119.7z?rlkey=ox0p6udd3mzsdz1djjvs1u09g&st=umimp4wm&dl=0

We suggest erasing the preloaded firmware before loading your own codes.

7. Miscellaneous

Soldering Temperature-Time Profile for Re-Flow Soldering

Maximum number of cycles for re-flow is 2. No opposite side re-flow is allowed due to module weight.

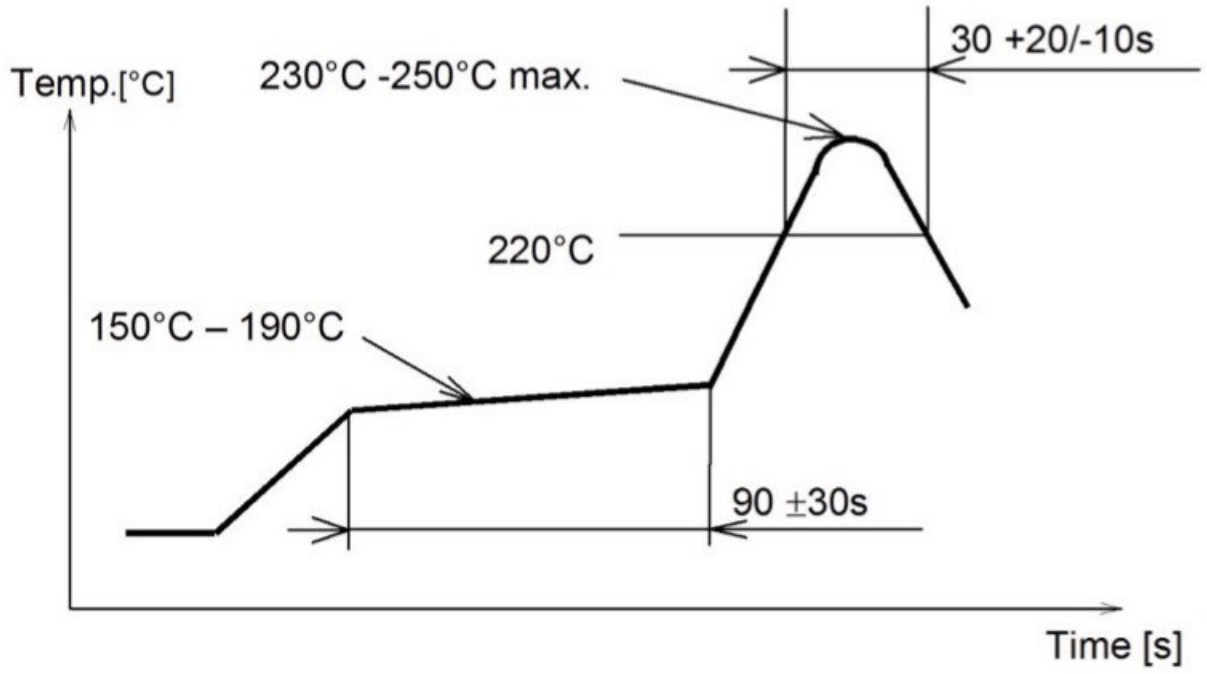

Cautions, Design Notes, and Installation Notes

Failure to follow the guidelines set forth in this document may result in degrading of the product's functions and damage to the product.

Design Notes

(1) Follow the conditions written in this specification, especially the control signals of this module.

(2) The supply voltage has to be free of AC ripple voltage (for example from a battery or a low noise regulator output). For noisy supply voltages, provide a decoupling circuit (for example a ferrite in series connection and a bypass capacitor to ground of at least 47uF directly at the module).

(3) This product should not be mechanically stressed when installed.

(4) Keep this product away from heat. Heat is the major cause of decreasing the life of these products.

(5) Avoid assembly and use of the target equipment in conditions where the products' temperature may exceed the maximum tolerance.

(6) The supply voltage should not be exceedingly high or reversed. It should not carry noise and/or spikes.

(7) this product away from other high frequency circuits.

Notes on Antenna and PCB Layout

(1) Don't use a module with internal antenna inside a metal case.

(2) For PCB layout:

- Avoid running any signal line below module whenever possible,
- No ground plane below antenna,
- If possible, cut-off the portion of main board PCB below antenna.

Installation Notes

(1) Reflow soldering is possible twice based on the time-temperature profile in this data sheets. Set up the temperature at the soldering portion of this product according to this reflow profile.

(2) Carefully position the products so that their heat will not burn into printed circuit boards or affect the other components that are susceptible to heat.

(3) Carefully locate these products so that their temperatures will not increase due to the effects of heat generated by neighboring components.

(4) If a vinyl-covered wire comes into contact with the products, then the cover will melt and generate toxic gas, damaging the insulation. Never allow contact between the cover and these products to occur.

(5) This product should not be mechanically stressed or vibrated when reflowed.

(6) If you want to repair your board by hand soldering, please keep the conditions of this chapter.

(7) Do not wash this product.

(8) Refer to the recommended pattern when designing a board.

(9) Pressing on parts of the metal cover or fastening objects to the metal will cause damage to the unit.

(10) For more details on LGA (Land Grid Array) soldering processes refer to the application note.

Usage Condition Notes

(1) Take measures to protect the unit against static electricity. If pulses or other transient loads (a large load applied in a short time) are applied to the products, check and evaluate their operation before assembly on the final products.

(2) Do not use dropped products.

(3) Do not touch, damage or soil the pins.

(4) Follow the recommended condition ratings about the power supply applied to this product.

(5) Electrode peeling strength: Do not add pressure of more than 4.9N when soldered on PCB

(6) Pressing on parts of the metal cover or fastening objects to the metal cover will cause damage.

(7) These products are intended for general purpose and standard use in general electronic equipment, such as home appliances, office equipment, information and communication equipment.

Storage Notes

(1) The module should not be stressed mechanically during storage.

(2) Do not store these products in the following conditions or the performance characteristics of the product, such as RF performance will be adversely affected:

- Storage in salty air or in an environment with a high concentration of corrosive gas.
- Storage in direct sunlight
- Storage in an environment where the temperature may be outside the range specified.
- Storage of the products for more than one year after the date of delivery storage period.

(3) Keep this product away from water, poisonous gas and corrosive gas.

(4) This product should not be stressed or shocked when transported.

(5) Follow the specification when stacking packed crates (max. 10).

Safety Conditions

These specifications are intended to preserve the quality assurance of products and individual components. Before use, check and evaluate the operation when mounted on your products. Abide by these specifications, without deviation when using the products. These products may short-circuit. If electrical shocks, smoke, fire, and/or accidents involving human life are anticipated when a short circuit occurs, then provide the following failsafe functions, as a minimum.

(1)Ensure the safety of the whole system by installing a protection circuit and a protection device.

(2)Ensure the safety of the whole system by installing a redundant circuit or another system to prevent a dual fault causing an unsafe status.

Other Cautions

(1)This specification sheet is copyrighted. Reproduction of this data sheets is permissible only if reproduction is without alteration and is accompanied by all associated warranties, conditions, limitations, and notices.

(2)Do not use the products for other purposes than those listed.

(3)Be sure to provide an appropriate failsafe function on your product to prevent an additional damage that may be caused by the abnormal function or the failure of the product.

(4)This product has been manufactured without any ozone chemical controlled under the Montreal Protocol.

(5)These products are not intended for other uses, other than under the special conditions shown below. Before using these products under such special conditions, check their performance and reliability under the said special conditions carefully to determine whether or not they can be used in such a manner.

- In liquid, such as water, salt water, oil, alkali, or organic solvent, or in places where liquid may splash.
- In direct sunlight, outdoors, or in a dusty environment
- In an environment where condensation occurs.
- In an environment with a high concentration of harmful gas.

(6) If an abnormal voltage is applied due to a problem occurring in other components or circuits, replace these products with new products because they may not be able to provide normal performance even if their electronic characteristics and appearances appear satisfactory.

(7) When you have any question or uncertainty, contact Fanstel.

Packaging

Production modules are delivered in reel, 1000 modules in each reel.

FCC Label

The Original Equipment Manufacturer (OEM) must ensure that the OEM modular transmitter must be labeled with its own FCC ID number. This includes a clearly visible label on the outside of the final product enclosure that displays the contents shown below. If the FCC ID is not visible when the equipment is installed inside another device, then the outside of the device into which the equipment is installed must also display a label referring to the enclosed equipment

The end product with this module may subject to perform FCC part 15 unintentional emission test requirement and be properly authorized.

This device is intended for OEM integrator only.

8. Revision History

- May 2024, Ver. 0.50: The first draft copy
- July 2024, Ver. 0.51: Draft revision.
- Aug. 2024, Ver. 0.52: Add module mechanical drawings.
- Aug. 2024, Ver. 0.53: Revise module mechanical drawings.
- Nov. 2024, Ver. 0.70: Revision for rev B silicon.
- Nov. 2024, Ver.0.71: Add BM05C and BM05M.
- Jan. 2025, Ver. 1.00: Initial release.

9. Contact Us

United States:
Fanstel Corp.
7466 E. Monte Cristo Ave. Scottsdale AZ 85260
Tel. 1 480-948-4928
Fax. 1-480-948-5459
Email: info@fanstel.com
Website: www.fanstel.com

Taiwan:
Fanstel Corp.
10F-10, 79 Xintai Wu Road
Xizhu, New Taipei City, Taiwan 22101
泛世公司
臺灣省新北市汐止區新臺五路79號10樓之10, 22101
Tel. 886-2-2698-9328
Fax. 886-2-2698-4813
Email: info@fanstel.com
Website: www.fanstel.com

China:
Fanstel Technologies Corp.
11 Jiale Street
Ping-Dih, Long-Gang, Shen Zhen, GD 518117
泛世康科技(深圳)有限公司
廣東省深圳市龍崗區坪地鎮佳樂街11號
Tel. 86-755-8409-0928
Fax. 86-755-8409-0973
QQ. 3076221086
Email: info@fanstel.com
Website: www.fanstel.com